THE INFORMATION CONTAINED IN THIS DRAWING IS THE SOLE PROPERTY OF L-COM, INC. ANY REPRODUCTION IN PART OR WHOLE WITHOUT THE WRITTEN PERMISSION OF L-COM, INC. IS PROHIBITED.

REVISIONS

REV	DESCRIPTION	DATE	APPROVED
A	INITIAL RELEASE	01/22/04	MCCORMICK
B	ECN 6224: UPDATED DRAWING FORMAT & PACKAGING. ADDED ROHS STAMP	6/21/12	D. DESJARDIN

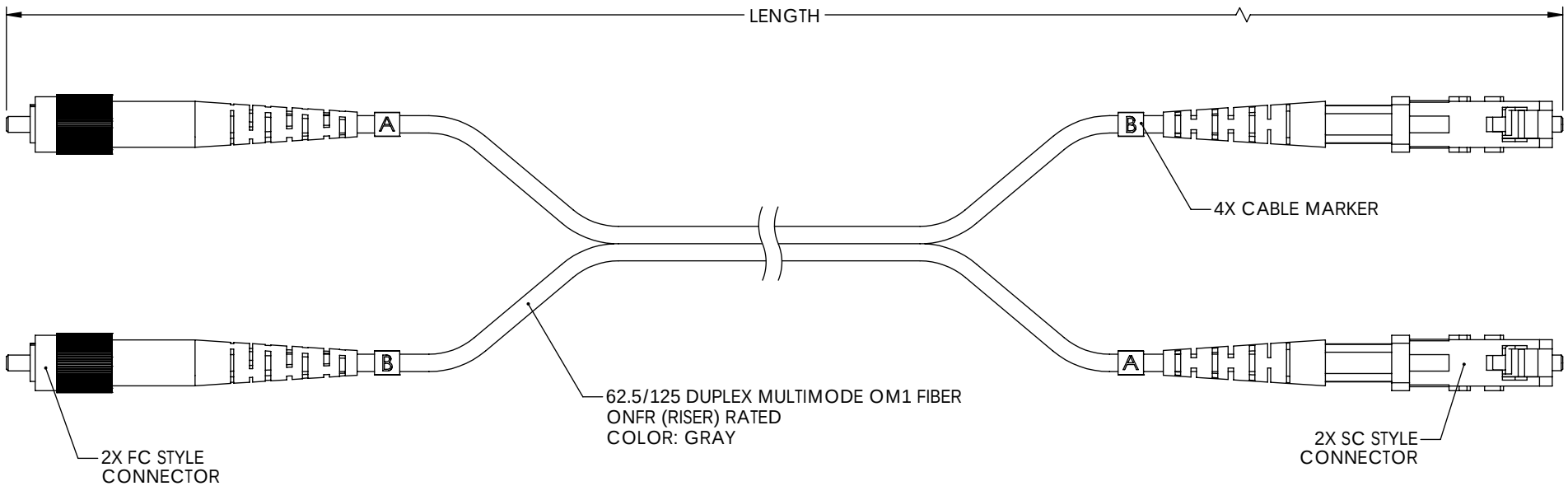

PART NUMBER	LENGTH	
	METERS	FEET
FODFC-SC-01	1.0	3.3
FODFC-SC-02	2.0	6.6
FODFC-SC-03	3.0	9.8
FODFC-SC-04	4.0	13.1
FODFC-SC-05	5.0	16.4

B **RoHS Compliant**

B

NOTES:

1. CONNECTOR ASSEMBLY POLISH TYPE: PC
2. ALL CONNECTORS ACCOMPANIED WITH A DUST CAP INSTALLED (NOT SHOWN).
3. CABLE ASSEMBLY SHALL BE INDIVIDUALLY PACKAGED IN ACCORDANCE WITH L-COM PACKAGING SPECIFICATION PS-0031.

UNLESS OTHERWISE SPECIFIED,

DIMENSIONS ARE IN INCHES [mm]

OVERALL CABLE LENGTH TOLERANCE:
012 [305] = +1 [25] / -0
>12 [305] 060 [1524] = +2 [51] / -0
>60 [1524] 0120 [3048] = +4 [102] / -0
>120 [3048] 0300 [7620] = +6 [152] / -0
>300 [7620] = +5% / -0%

ALL OTHER DIMENSIONAL TOLERANCES:
.X = Ñ .2
.XX = Ñ .02
.XXX = Ñ.005

PROJECTION

APPROVALS	DATE
DRAWN BY C.MCCORMICK	01/07/2004
CHECKED BY D.PARHAM	01/07/2004
APPROVED BY R.CARRICK	01/07/2004

CONFIGURATION DETAILS OF UNDIMENSIONED FEATURES MAY VARY

COLOR VARIATIONS MAY OCCUR

L-COM Global Connectivity

45 BEECHWOOD DRIVE
NORTH ANDOVER, MA
01845

CATEGORY: FIBER OPTICS

PRODUCT DESCRIPTION: CA FC-SC 62.5/125 DUPLEX

SIZE	FSCM NO.	DWG. NO.	REV.
A	43321	FODFC-SC-01	B

SCALE: NONE | CAD FILE: FODFC-SC-01.SLDDRW | SHEET 1 OF 1