THE INFORMATION CONTAINED IN THIS DRAWING IS THE SOLE PROPERTY OF L-COM, INC. ANY REPRODUCTION IN PART OR WHOLE WITHOUT THE WRITTEN PERMISSION OF L-COM, INC. IS PROHIBITED.

REVISIONS			
REV	DESCRIPTION	DATE	APPROVED
A	INITIAL RELEASE	1/30/14	D.GRIFFIN

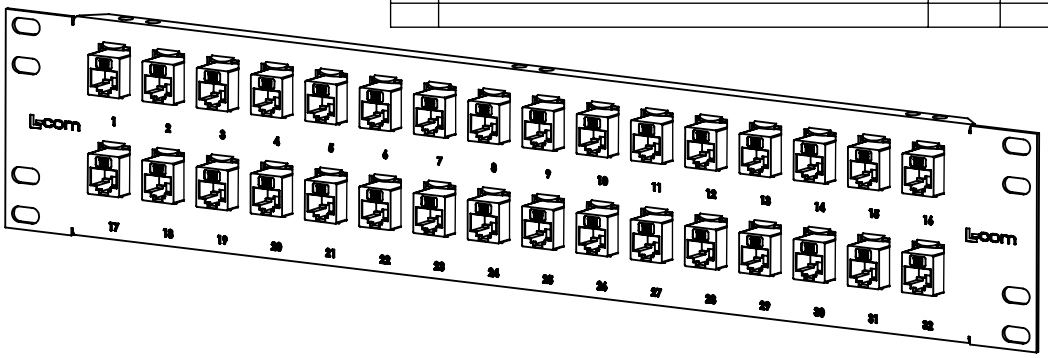

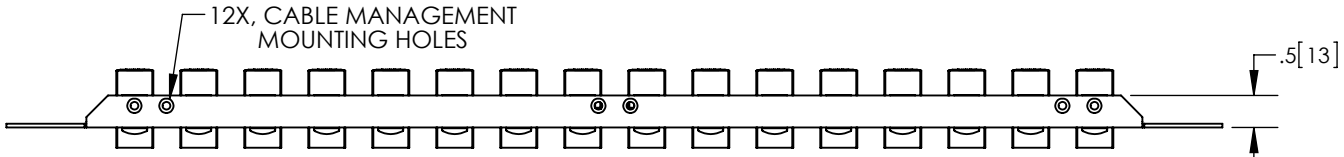

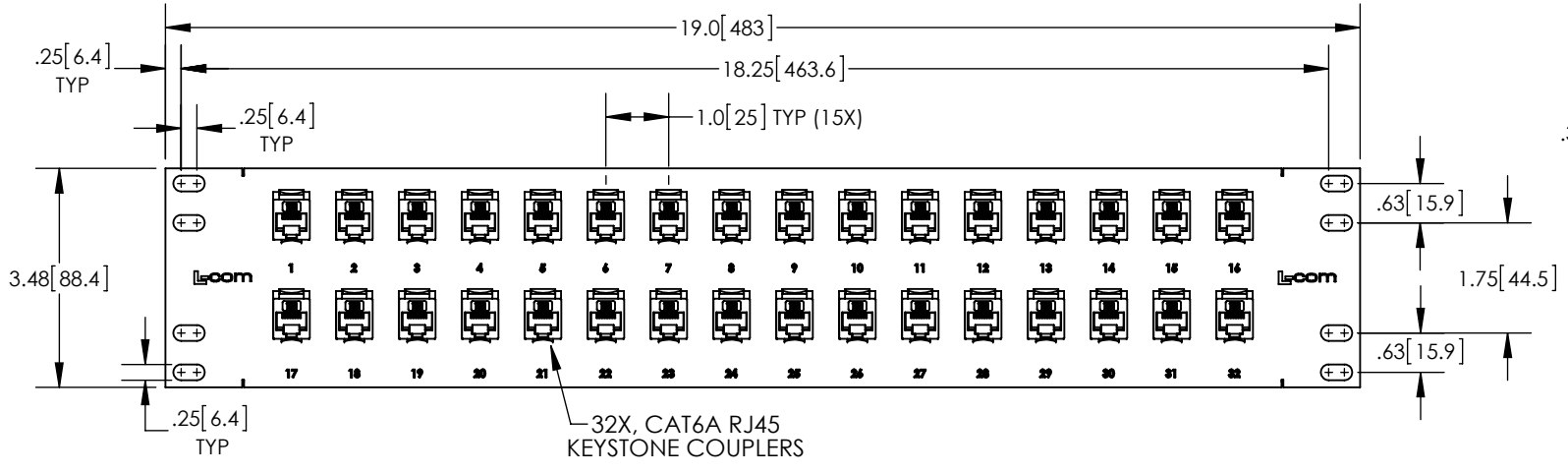

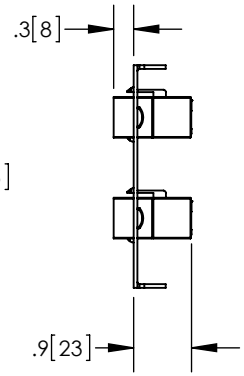

NOTE:

1- MATERIAL: .06 THICK COLD ROLLED STEEL

2- PANEL FINISH: FLAT BLACK POWDER COAT

3- SILKSCREEN COLOR: WHITE

4- PANEL ASSEMBLY SHALL BE PACKAGED IN ACCORDANCE WITH L-COM SPECIFICATION PS-0014

REGULATORY COMPLIANCE:
CE2011/65/EU(RoHS DIRECTIVE)

UNLESS OTHERWISE SPECIFIED,
DIMENSIONS ARE IN INCHES [mm]

DIMENSIONAL TOLERANCES:
.X = ±.1 [2.54]
.XX = ±.01 [.25]
.XXX = ±.005 [.13]

ANGULAR TOLERANCES:
ALL = ± 1°

PROJECTION

APPROVALS	DATE
DRAWN BY B.PUCHASKI	01/27/14
CHECKED BY P.PESA	01/27/14
APPROVED BY P.PESA	01/27/14

CONFIGURATION DETAILS OF UNDIMENSIONED FEATURES MAY VARY

COLOR VARIATIONS MAY OCCUR

L-COM Global Connectivity
45 BEECHWOOD DRIVE
NORTH ANDOVER, MA
01845

CATEGORY: RACK PANELS

PRODUCT DESCRIPTION: 32 PORT 19" 2U RACK MOUNT W/ CAT6A KEYSTONE COUPLERS

SIZE	FSCM NO.	DWG. NO.	REV.
A	43321	PR35C6A-32	A

SCALE: NONE | CAD FILE: PR35C6A-32.SLDDRW | SHEET 1 OF 1