THE INFORMATION CONTAINED IN THIS DRAWING IS THE SOLE PROPERTY OF L-COM, INC. ANY REPRODUCTION IN PART OR WHOLE WITHOUT THE WRITTEN PERMISSION OF L-COM, INC. IS PROHIBITED.

REVISIONS

REV	DESCRIPTION	DATE	APPROVED
A	RELEASED	09/01/09	DFP
B	ECN4728: .31 WAS .32. .070 WAS .06	05/06/10	DFP
C	ECN 8014: OVERALL DIMENSION WAS 1.42, ADDED WIRE MAP, NOTES	7/13/15	D.FRISIELLO

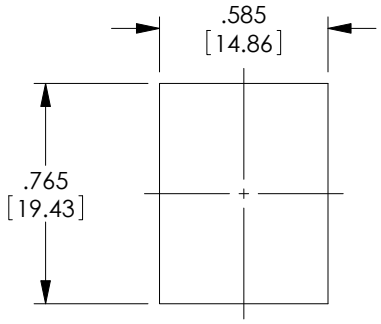

RECOMMENDED
PANEL OPENING

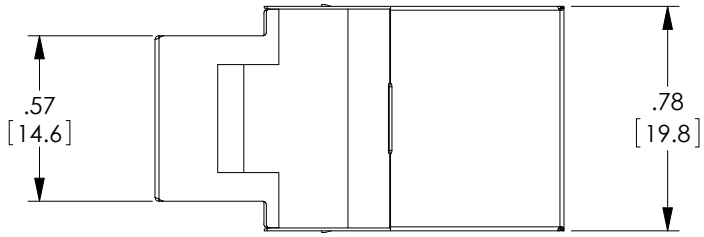

WIRING MAP

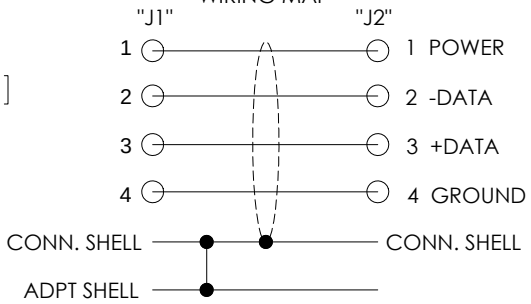

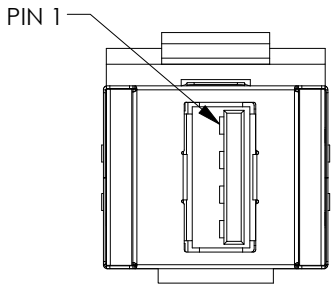

"J1"
USB TYPE A JACK
30µ" SELECTIVE GOLD PLATED CONTACT
NICKEL PLATED SHELL

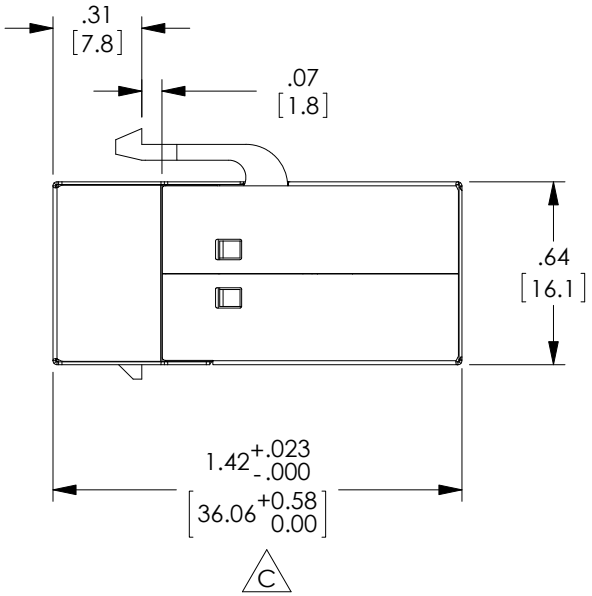

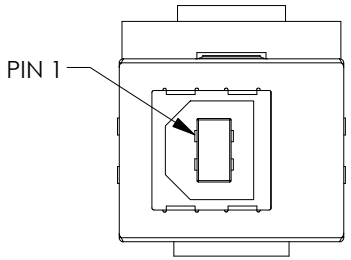

"J2"
USB TYPE B JACK
30µ" SELECTIVE GOLD PLATED CONTACT
NICKEL PLATED SHELL

NOTE:

1. HOUSING: ABS, UL94V-0 RATED
2. SHIELDING: NICKEL PLATED BRASS
3. CONTACT PLATING: 30µINCHES GOLD
4. ADAPTER SHALL BE TESTED FOR CONTINUITY.
5. ADAPTER SHALL BE INDIVIDUALLY PACKAGED IN ACCORDANCE WITH L-COM SPECIFICATION PS-0031.

C

REGULATORY COMPLIANCE:
CE2011/65/EU(RoHS DIRECTIVE)

UNLESS OTHERWISE SPECIFIED,
DIMENSIONS ARE IN INCHES [mm]
OVERALL CABLE LENGTH TOLERANCE:
≤12 [305] = +1 [25] / -0
>12 [305] ≤60 [1524] = +2 [51] / -0
>60 [1524] ≤120 [3048] = +4 [102] / -0
>120 [3048] ≤300 [7620] = +6 [152] / -0
>300 [7620] = +5% / -0%
ALL OTHER DIMENSIONAL TOLERANCES:
.X = ± .2 [5.08]
.XX = ± .02 [.51]
.XXX = ±.005 [.13]

PROJECTION

APPROVALS	DATE
DRAWN BY D. PARHAM	09/01/2009
CHECKED BY ENG	09/02/2009
APPROVED BY S. SMITH	09/02/2009

CONFIGURATION DETAILS OF UNDIMENSIONED FEATURES MAY VARY

COLOR VARIATIONS MAY OCCUR

L-COM Global Connectivity
45 BEECHWOOD DRIVE
NORTH ANDOVER, MA
01845

CATEGORY: USB

PRODUCT DESCRIPTION: ADPT, USB KEYSTONE A-B

SIZE	FSCM NO.	DWG. NO.	REV.
A	43321	UADKEY-AB	C

SCALE: NONE | CAD FILE: UADKEY-AB.SLDDRW | SHEET 1 OF 1