THE INFORMATION CONTAINED IN THIS DRAWING IS THE SOLE PROPERTY OF L-COM, INC. ANY REPRODUCTION IN PART OR WHOLE WITHOUT THE WRITTEN PERMISSION OF L-COM, INC. IS PROHIBITED.

REVISIONS

REV	DESCRIPTION	DATE	APPROVED
A	INTIAL RELEASE	11/05/2007	D. PARHAM
A	ECN 99999: MADE ALL DIMENSIONS REFERENCE AND NEW FORMAT, ROHS	12/14/09	D.FRISIELLO

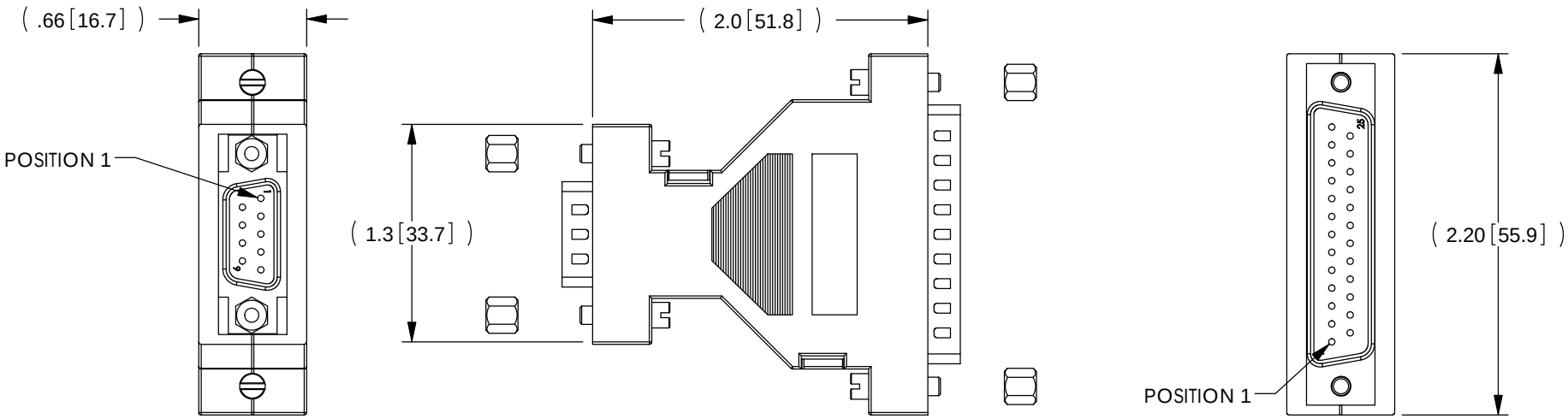

"P1"
MALE, 9 PIN
D-SUB CONNECTOR

"P2"
MALE, 25 PIN
D-SUB CONNECTOR

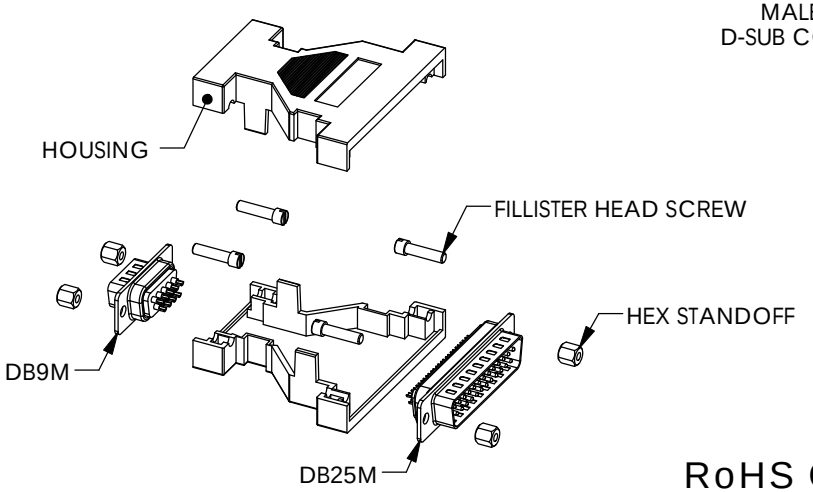

NOTE

MATERIAL
HOUSING: THERMOPLASTIC
CONNECTOR SHELL: COLD ROLLED STEEL
INSULATOR: THERMOPLASTIC. UL94V-0 RATED
CONTACTS: COPPER ALLOY
HARDWARE: STEEL OR BRASS

FINISH:
CONTACTS: GOLD PLATED
SHELL: TIN FINISH
HARDWARE: NICKEL PLATED

MISCELLANEOUS:
KIT CONTAINS:
1- THERMOPLASTIC HOUSING
1- 25 PIN, MALE D-SUB CONNECTOR (SOLDER CUP)
1- 9 PIN, MALE D-SUB CONNECTOR (SOLDER CUP)
4- 4-40UNC-2A SCREWS
4- 4-40UNC-2B HEX STANDOFFS

RoHS Compliant ✔

UNLESS OTHERWISE SPECIFIED,
DIMENSIONS ARE IN INCHES [mm]
DIMENSIONAL TOLERANCES:
.X = ±.1
.XX = ±.01
.XXX = ±.005
ANGULAR TOLERANCES:
ALL = ± 1°
PROJECTION

APPROVALS	DATE
DRAWN BY D.PARHAM	11/05/2007
CHECKED BY D. FRISIELLO	11/05/2007
APPROVED BY J. KIEZULAS	11/05/2007

CONFIGURATION DETAILS OF UNDIMENSIONED FEATURES MAY VARY

COLOR VARIATIONS MAY OCCUR

REF

L-COM Global Connectivity
45 BEECHWOOD DRIVE
NORTH ANDOVER, MA
01845

CATEGORY: DATA CABLING

PRODUCT DESCRIPTION: ADAPTOR KIT

SIZE	FSCM NO.	DWG. NO.	REV.
A	43321	DIY259MM	A

SCALE: NONE | CAD FILE: DIY259MM.SLDDRW | SHEET 1 OF 1